dunbrik flues
domestic flue & chimney systems
Telephone: 01924 373694 Email: tech@dunbrik.co.uk Web: www.dunbrik.co.uk

Typical 200mm I.D. flue liner system for stove appliance with offset.

Date: November 2021

Ref: **stove-6m-offset-deep**

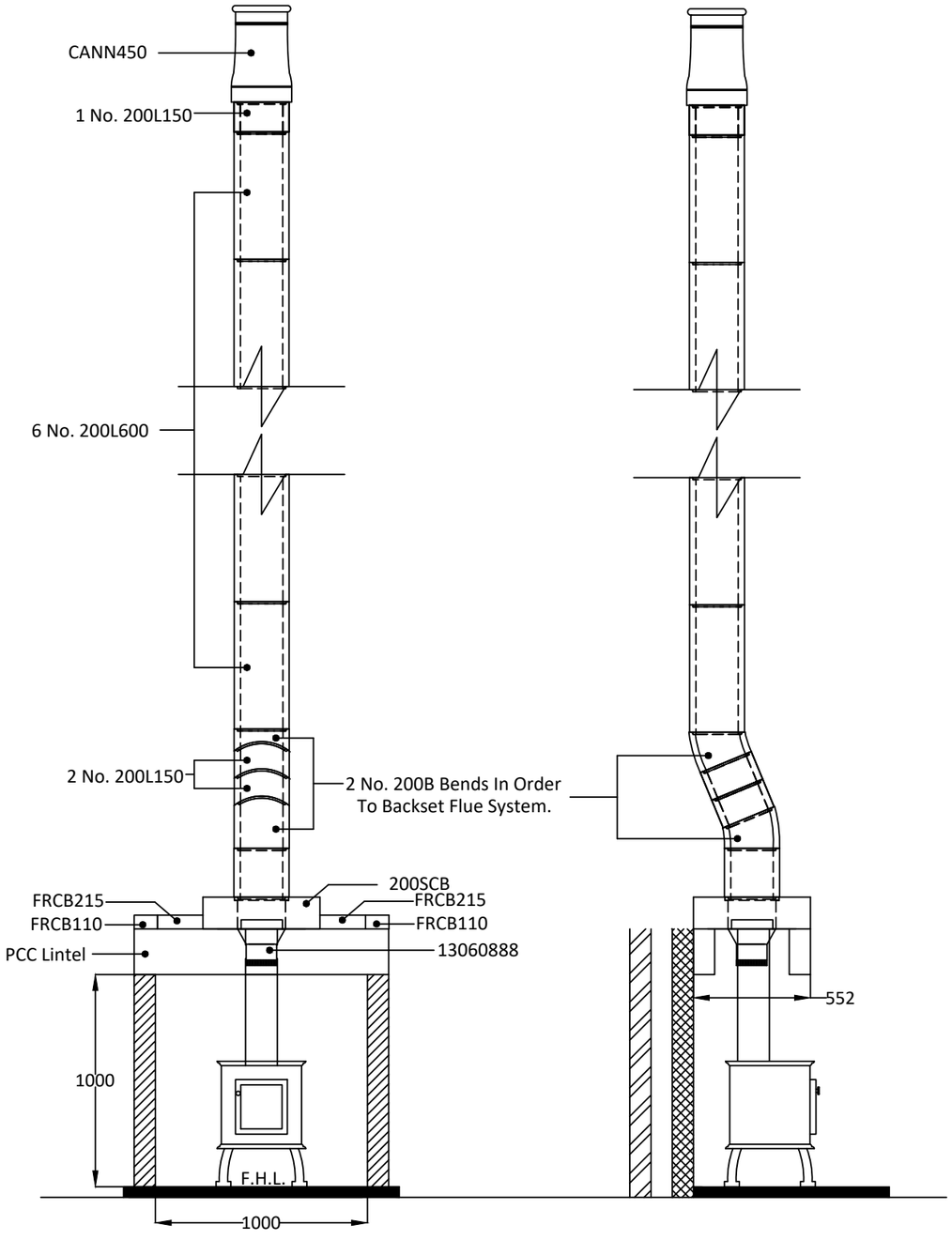

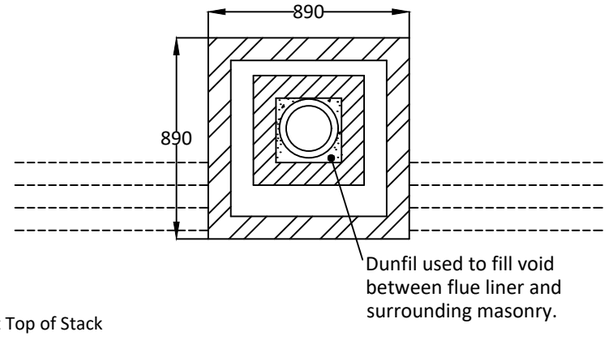

Plan at Top of Stack

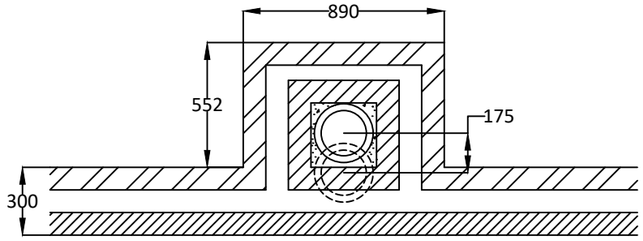

Plan at First Floor Level

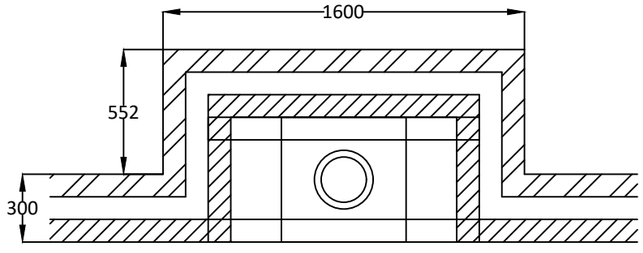

Plan at Ground Floor Level

Dunbrik A1 Concrete Flue Liner System to BS EN 1857

Notes

Please note the fireplace recess closure blocks are a non-load bearing unit.

Chimney Height from FFL to underside of chimney pot.

Please have your architect check this estimate to your drawings to ensure it meets both your requirements and current building regulations, british standards and codes of practice.

ALL DIMENSIONS ARE SHOWN IN MILLIMETRES NOT TO SCALE

dunbrik flues
domestic flue & chimney systems

Dunbrik A1 Concrete Flue Liners
for domestic chimneys
Flue Costing
200 mm id

Tel: 01924 373694
Email: tech@dunbrik.co.uk
Web: www.dunbrik.co.uk

Costing for: **Typical System Price**
House type 200mm I.D. flue for stove appliance with offset.
Customer ref. Chimney height 5998mm from ffl to u/s chimney pot, offset 200mm
Site
Plot number

Costing ref **stove-6m-offset-deep**
Date 25 November 2021
By
Price list October 2021

Components	Product code	Qty	Prices each	Cost £
Support lintels supplied by others	n/a			
Fireplace recess closure block 215mm x 552mm x 65mm	FRCB215	2	11.36	22.72
Fireplace recess closure block 110mm x 552mm x 65mm	FRCB110	2	8.77	17.54
Stove connection block 552mm x 552mm x 150mm	200SCB	1	145.80	145.80
200mm flue liner bend 22.5 degrees	200B	2	18.29	36.58
200mm flue liner 600mm tall	200L600	6	18.74	112.44
200mm flue liner 230mm tall	200L230	1	11.21	11.21
200mm flue liner 150mm tall	200L150	3	8.85	26.55
Flue liner sealant 310ml	Dunseal	4	6.68	26.72
Infill aggregate 22kg mix for void	Dunfil	20	13.92	278.40
Cannon pot 450mm tall red	Cann450R	1	50.90	50.90
Topguard birdguard cowl 260 tall red	TG260	1	101.36	101.36
Smoke pellet tube	Smoke	1	11.34	11.34
Flue notice plate	Plate	1	7.73	7.73
Stove pipe adaptor for 200SCB (155mm to 200mm)	13060888	1	147.40	147.40
310ml Skeleton Gun	Sealgun	1	6.40	6.40
Red polypropylene air brick 220mm x 72mm	REDG930	2	0.92	1.84
High impact styrene black cavity sleeve 218mm x 72mm	CSG935	2	5.03	10.06

Cost ex-works *		**1014.99**
Delivery charge		**95.00**
Goods		**£ 1,109.99**
VAT @	20%	**222.00**
Total		**£ 1,331.99**

All prices are ex-works, valid for 30 days and are subject to VAT.
Free delivery for orders over £1,700 goods value to UK mainland excluding the Scotish Highlands (POA).
All trading is subject to our standard conditions of sale (copy available).

Notes

This flue costing is based on information provided. Please have your architect check the costing to your drawings prior to ordering.
to ensure that it meets with your requirements. Please also check the pot/terminal style and colour.
For construction guidance refer to the flue illustration and the installation guide available on our website www.dunbrikflues.co.uk

Please ensure that the flue and chimney are constructed in accordance with Building regulations part J

dunbrik flues domestic flue & chimney systems

Chimney Checklist

Dunbrik (Yorks) Ltd
Tel: 01924 373694 Email: tech@dunbrik.co.uk

The checklist is based on Building Regulations ADJ Appendix A. with Dunbrik flue liner system data. The builder/installer should insert details of the actual fireplace opening sizes, actual ventilation installed and any variations to the usual data.

For	**Typical System Price**	Costing ref	**stove-6m-offset-deep**
Site at		Plot number	
System	**Dunbrik 200mm id A1 concrete flue liners**	House type	**200mm I.D. flue for stove appliance with offset.**
Date	**25 Nov 2021** **200 mm id**	Customer ref.	**Chimney height 5998mm from ffl to u/s chimney pot, offset 200mm**

Checklist for hearths, fireplaces, flues and chimneys

This checklist can help you to ensure hearths, fireplaces, flues and chimneys are satisfactory. If you have been directly engaged, copies should also be offered to the client and to the Building Control body to show what you have done to comply with the requirements of part J. If you are a sub-contractor, a copy should be offered to the main contractor.

	Items listed in ADJ Appendix A	Details for builder to complete or amend	
1	Building address, where work has been carried out		
			Amend
2	Identification of hearth, fireplace, chimney or flue.	**Fireplace in lounge**	
3	Firing capability: solid fuel/gas/oil/all	**All**	
4	Intended type of appliance. State type or make. If open fire give finished fireplace opening dimensions.	**For domestic fuel stove up to a 200mm external diameter flue outlet pipe**	
5	Ventilation provisions for the appliance State type and area of permanently open air vents	**Through wall ventilation** **As per stove manufacturers requirements**	
6	Chimney or flue construction	**New masonry chimney with:**	
a)	State the type or make and whether new or existing.	**Dunbrik A1 concrete flue liners to BSEN1857**	
b)	Internal flue size (and equivalent flue height, where calculated natural draught gas appliances only).	**200mm internal diameter**	
c)	If liners are used confirm they are correctly jointed in accordance with manufacturers instructions and state jointing materials used.	**Tongue downwards into rebate and joined with Dunseal fireproof mortar**	
d)	If an existing chimney has been refurbished with a new liner, type or make of liner fitted.		
e)	Details of flue outlet terminal — Outlet detail	**Cannon pot 450mm tall**	
	Complies with:	**BSEN13502:2002**	
f)	Number and angle of bends.	**2 bends ref 200B at 22.5 degrees**	
g)	Provision for cleaning and recommended frequency.	**Annually via stove**	
7	Hearth. Form of construction. New or existing	**New** **As diagram 25 in ADJ**	
8	Inspection and testing after completion Test (Appendix E in AD J 2002) and results Flue inspection results — Visual, Sweeping, Coring ball, Smoke Appliance (where included) — Spillage	Tests carried out by:	

I/We the undersigned confirm that the above details are correct. In my opinion, these works comply with the relevant requirements in Part J of Schedule 1 to the Building Regulations.

Print name & title		Profession	
Capacity		Tel no	
Address		Postcode	
Signed		Date	

Registered membership of (e.g. Gas Safety, OFTEC, HETAS, NACE, NACS)