dunbrik flues
domestic flue & chimney systems
Telephone: 01924 373694 Email: tech@dunbrik.co.uk Web: www.dunbrik.co.uk

Sample 300mm I.D. flue liner system for open with offset.

Date: November 2021

Ref: **300id-7m-offset**

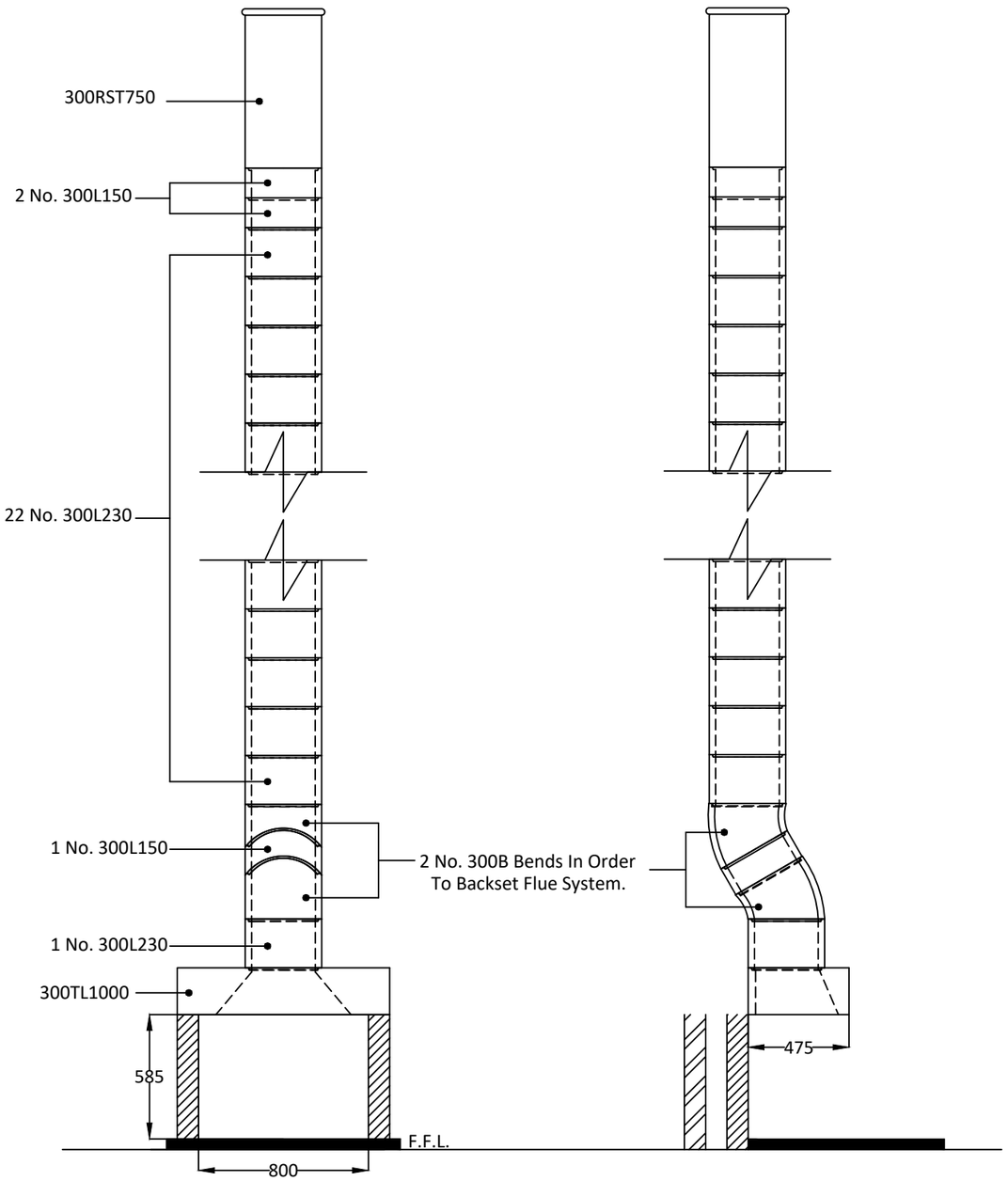

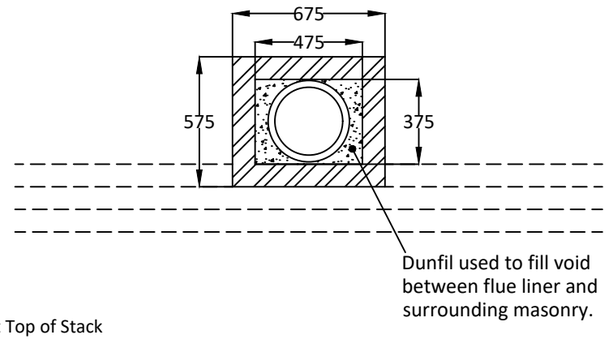

Plan at Top of Stack

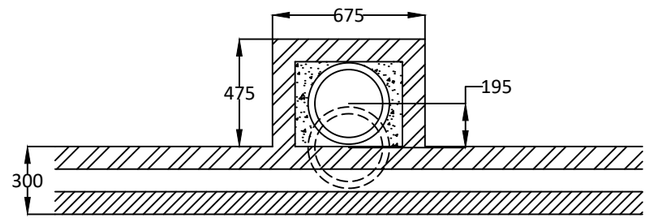

Plan at First Floor Level

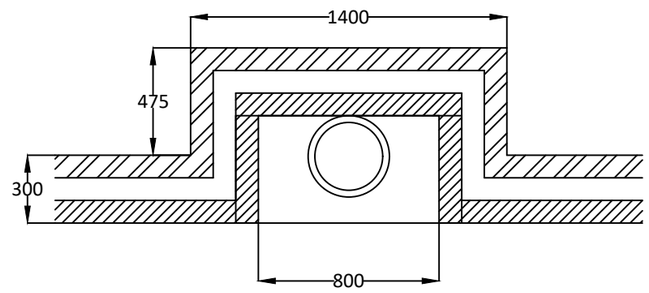

Plan at Ground Floor Level

Dunbrik A1 Concrete Flue Liner System to BS EN 1857

Notes

Chimney Height of 6990mm from FFL to underside of chimney pot.

Please have your architect check this estimate to your drawings to ensure it meets both your requirements and current building regulations, british standards and codes of practice.

ALL DIMENSIONS ARE SHOWN IN MILLIMETRES NOT TO SCALE

dunbrik flues
domestic flue & chimney systems
Telephone: 01924 373694 Email: tech@dunbrik.co.uk Web: www.dunbrik.co.uk

Sample 300mm I.D. straight flue liner system with backset for open.

Date: November 2021

Ref: **300id-7m-offset**

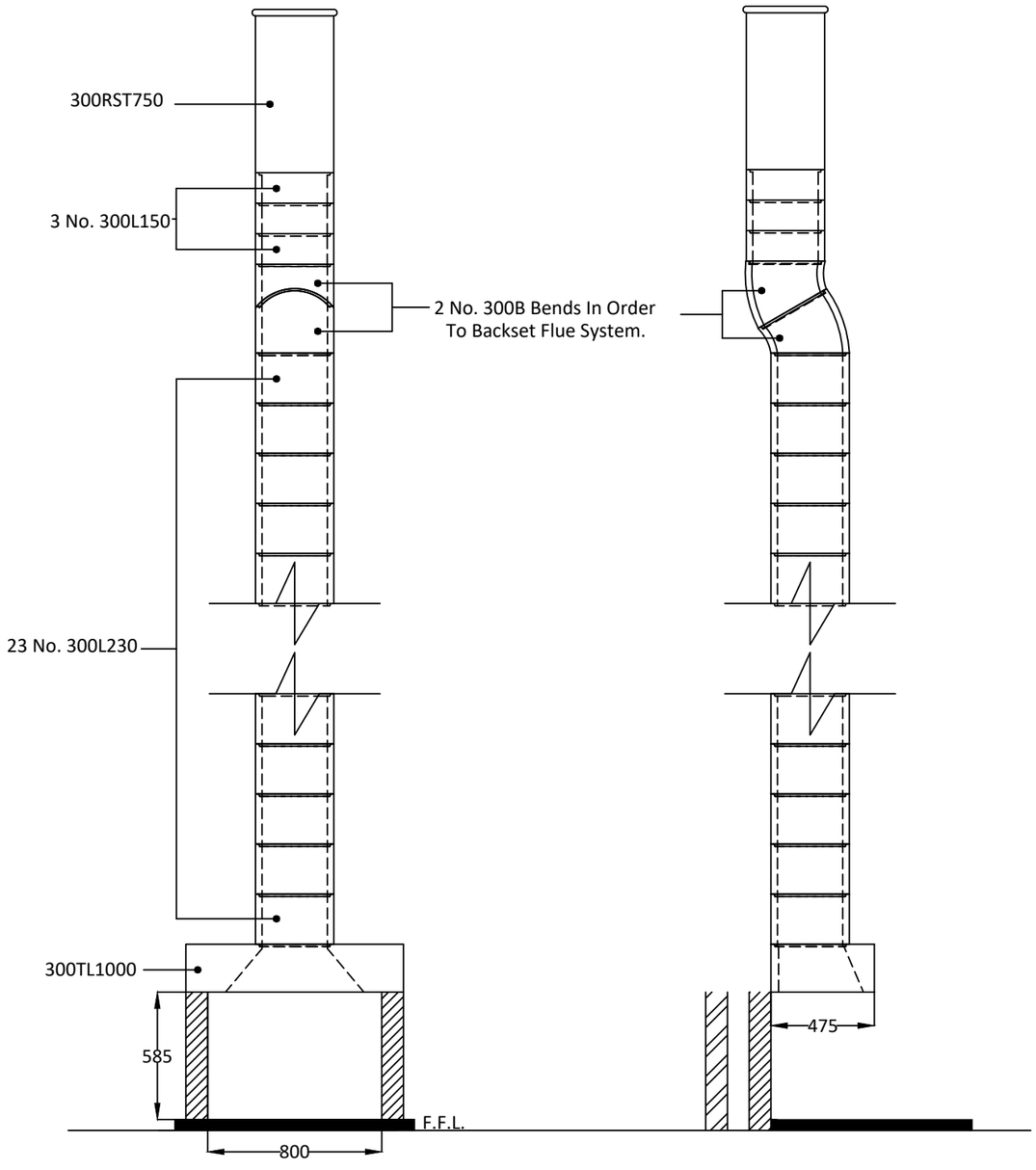

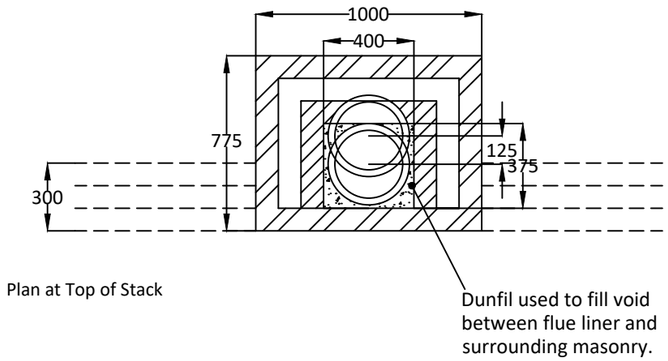

Plan at Top of Stack

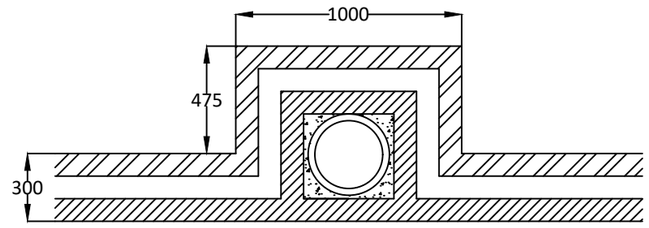

Plan at First Floor Level

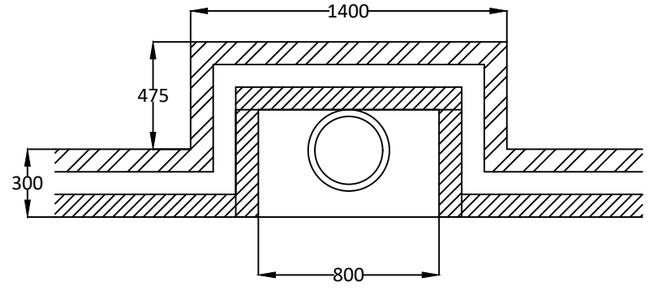

Plan at Ground Floor Level

Dunbrik A1 Concrete Flue Liner System to BS EN 1857

Notes

Chimney Height taken from FFL to underside of chimney pot.

Please have your architect check this estimate to your drawings to ensure it meets both your requirements and current building regulations, british standards and codes of practice.

ALL DIMENSIONS ARE SHOWN IN MILLIMETRES NOT TO SCALE

dunbrik flues
domestic flue & chimney systems
Telephone: 01924 373694 Email: tech@dunbrik.co.uk Web: www.dunbrik.co.uk

Sample 300mm I.D. straight flue liner system with backset for open.

Date: November 2021

Ref: **300id-7m-offset**

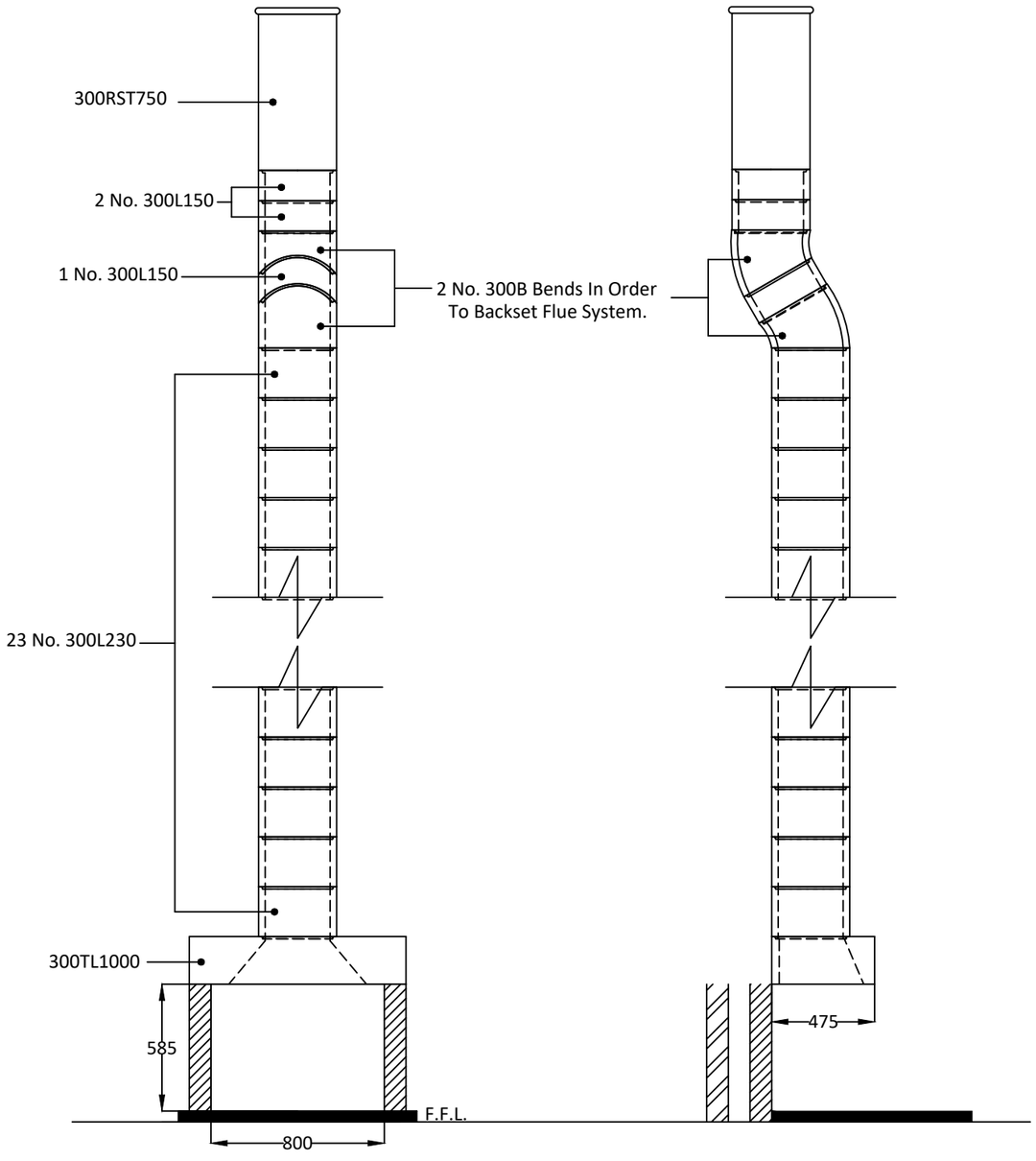

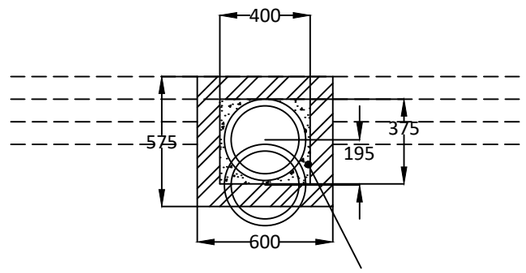

Plan at Top of Stack

Dunfil used to fill void between flue liner and surrounding masonry.

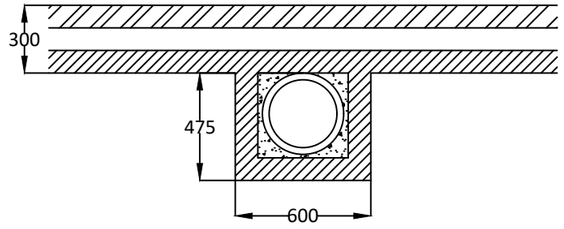

Plan at First Floor Level

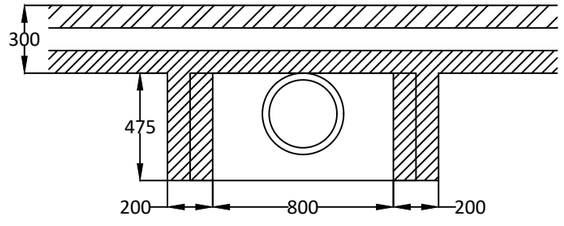

Plan at Ground Floor Level

Dunbrik A1 Concrete Flue Liner System to BS EN 1857

Notes

Chimney Height taken from FFL to underside of chimney pot.

Please have your architect check this estimate to your drawings to ensure it meets both your requirements and current building regulations, british standards and codes of practice.

ALL DIMENSIONS ARE SHOWN IN MILLIMETRES NOT TO SCALE

dunbrik flues
domestic flue & chimney systems

Dunbrik A1 Concrete Flue Liners
for domestic chimneys
Flue Costing
300 mm id

Tel: 01924 373694
Email: tech@dunbrik.co.uk
Web: www.dunbrik.co.uk

Costing for: **SAMPLE COSTING**
House type 300mm I.D. flue system for open fire with offset.
Customer ref. Chimney height 6090mm from ffl to u/s pot
Site
Plot number

Costing ref **300id-7m-offset**
Date 30 November 2021
By
Price list October 2021

Components	Product code	Qty	Prices each	Cost £
Throat lintel/gather unit 1000mm wide	300TL1000	1	108.29	108.29
300mm flue liner bend at 30 degrees	300B	2	49.96	99.92
300mm flue liner 230mm tall	300L230	23	27.26	626.98
300mm flue liner 150mm tall	300L150	3	16.89	50.67
Flue liner sealant 310ml	Dunseal	14	6.68	93.52
Infill aggregate 22kg mix for void	Dunfil	20	13.92	278.40
300mm straight 750mm pot red	300RST750R	1	222.65	222.65
Topguard birdguard cowl 350 id red	TG350R	1	155.06	155.06
Smoke pellet tube	Smoke	1	11.34	11.34
310ml Skeleton Gun	Sealgun	1	6.40	6.40
Flue notice plate	Plate	1	7.73	7.73
Red polypropylene air brick 220mm x 72mm	REDG930	6	0.92	5.52
High impact styrene black cavity sleeve 218mm x 72mm	CSG935	6	5.03	30.18

	Cost ex-works *		**1696.66**
For UK mainland up to 300 miles, orders over £1,700 goods value are delivered free	Delivery charge		**95.00**
Charge for individually plotting multiple flue orders is £30 per flue.	Goods		**£ 1,791.66**
* For collection orders add collection charge of £15 plus VAT	VAT @	20%	**358.33**
	Total		**£ 2,149.99**

Prices shown are based on the Dunbrik ex-works trade price list of October 2021 and are valid for 30 days.
Prices are subject to VAT. All trading is subject to our standard conditions of sale (copy available).

Notes

This flue costing is based on information provided. Please have your architect check the costing to your drawings prior to ordering.
to ensure that it meets with your requirements. Please also check the pot/terminal style and colour.
For construction guidance refer to the flue illustration and the installation guide available by post, fax or website.

Please ensure that the flue and chimney are constructed in accordance with Building regulations part J

dunbrik flues — **Chimney Checklist** — **Dunbrik (Yorks) Ltd**

domestic flue & chimney systems — Tel 01924 373694

The checklist is based on Building Regulations ADJ Appendix A. with Dunbrik flue liner system data. The builder/installer should insert details of the actual fireplace opening sizes, actual ventilation installed and any variations to the usual data.

For	**SAMPLE COSTING**	Costing ref	**300id-7m-offset**
Site at		Plot number	
System	**Dunbrik 300mm id A1 concrete flue liners**	House type	**300mm I.D. flue system for open fire with offset.**
Date	**30 Nov 2021** **300 mm id**	Customer ref.	**Chimney height 6090mm from ffl to u/s pot**

Checklist for hearths, fireplaces, flues and chimneys

This checklist can help you to ensure hearths, fireplaces, flues and chimneys are satisfactory. If you have been directly engaged, copies should also be offered to the client and to the Building Control body to show what you have done to comply with the requirements of part J. If you are a sub-contractor, a copy should be offered to the main contractor.

	Items listed in ADJ Appendix A	Details for builder to complete or amend	
1	Building address, where work has been carried out		
			Amend
2	Identification of hearth, fireplace, chimney or flue.	**Fireplace in lounge**	
3	Firing capability: solid fuel/gas/oil/all	**All**	
4	Intended type of appliance. State type or make. If open fire give finished fireplace opening dimensions.	**For gas fire or solid fuel fire** **471,200 sq.mm maximum**	
5	Ventilation provisions for the appliance State type and area of permanently open air vents	**Through wall ventilation** **35,300 sq mm minimum**	
6	Chimney or flue construction	**New masonry chimney with:**	
a)	State the type or make and whether new or existing.	**Dunbrik A1 concrete flue liners to BSEN1857**	
b)	Internal flue size (and equivalent flue height, where calculated natural draught gas appliances only).	**300mm internal diameter**	
c)	If liners are used confirm they are correctly jointed in accordance with manufacturers instructions and state jointing materials used.	**Tongue downwards into rebate** **and joined with Dunseal fireproof mortar**	
d)	If an existing chimney has been refurbished with a new liner, type or make of liner fitted.		
e)	Details of flue outlet terminal — Outlet detail	**300mm straight 750mm pot**	
	Complies with:	**BSEN13502:2002**	
f)	Number and angle of bends.	**2 bends ref 300B at 30 degrees**	
g)	Provision for cleaning and recommended frequency.	**Annually via fireplace opening**	
7	Hearth. Form of construction. New or existing	**New** **As diagram 25 in ADJ**	
8	Inspection and testing after completion Test (Appendix E in AD J 2002) and results Flue inspection results — Visual, Sweeping, Coring ball, Smoke Appliance (where included) — Spillage	Tests carried out by:	

I/We the undersigned confirm that the above details are correct. In my opinion, these works comply with the relevant requirements in Part J of Schedule 1 to the Building Regulations.

Print name & title		Profession	
Capacity		Tel no	
Address		Postcode	
Signed		Date	

Registered membership of (e.g. Gas Safety, OFTEC, HETAS, NACE, NACS)